SOLENOID OPERATED CARTRIDGE

CEBN-200-NAFN

PILOT OPERATED POPPET TYPE

Atlantic Fluid Tech

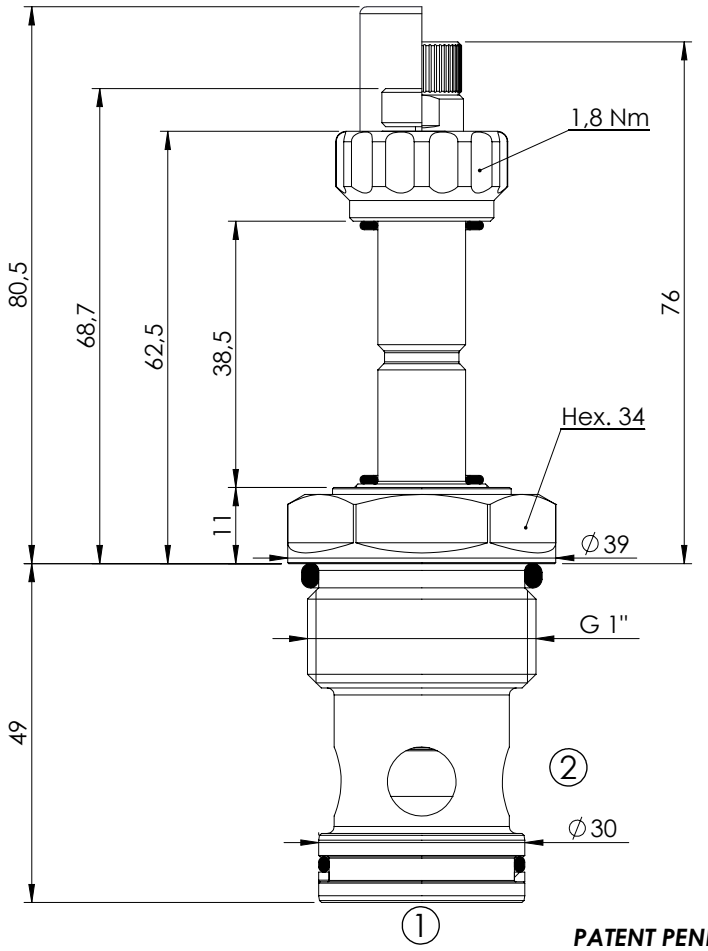

PATENT PENDING

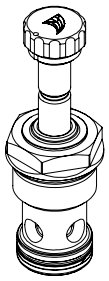

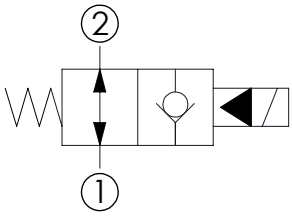

SPECIFICATIONS

Max. operating pressure:	350/500 bar
Rated flow:	200 l/min
Cavity:	VP000013
Weight:	0,35 kg
Min. voltage required:	90% of nominal
Coil type:	M7 type
Seal kit:	RC900013

NOTES

Installation torque: 135 - 150 Nm

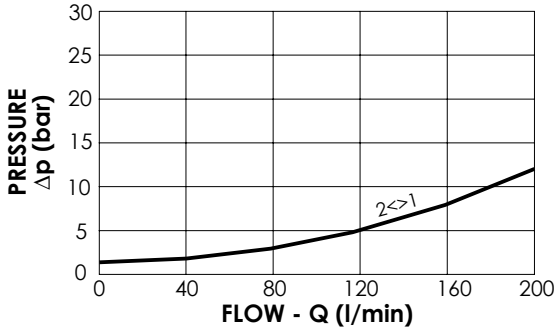

OPTIONS

Standard

Push style override

Knob style override

SEALING CAP

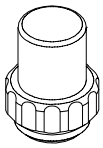

Ordering code: AT000113

ORDERING CODES

Quick code	Description	Options	Max operating pressure (bar)	
CE000376	CEBN-200-NAFN-06-013-N350	Standard	350	
CE000377	CEBN-200-NAFP-06-013-N350	Push style override	350	
CE000378	CEBN-200-NAFK-06-013-N350	Knob style override	350	
CE000676	CEBN-200-NAFN-06-013-N500	Standard	500	
CE000677	CEBN-200-NAFP-06-013-N500	Push style override	500	
CE000678	CEBN-200-NAFK-06-013-N500	Knob style override	500	